ALL DIMENSIONS IN M.M.

DO NOT SCALE – IF IN DOUBT ASK

FIRST ANGLE PROJECTION

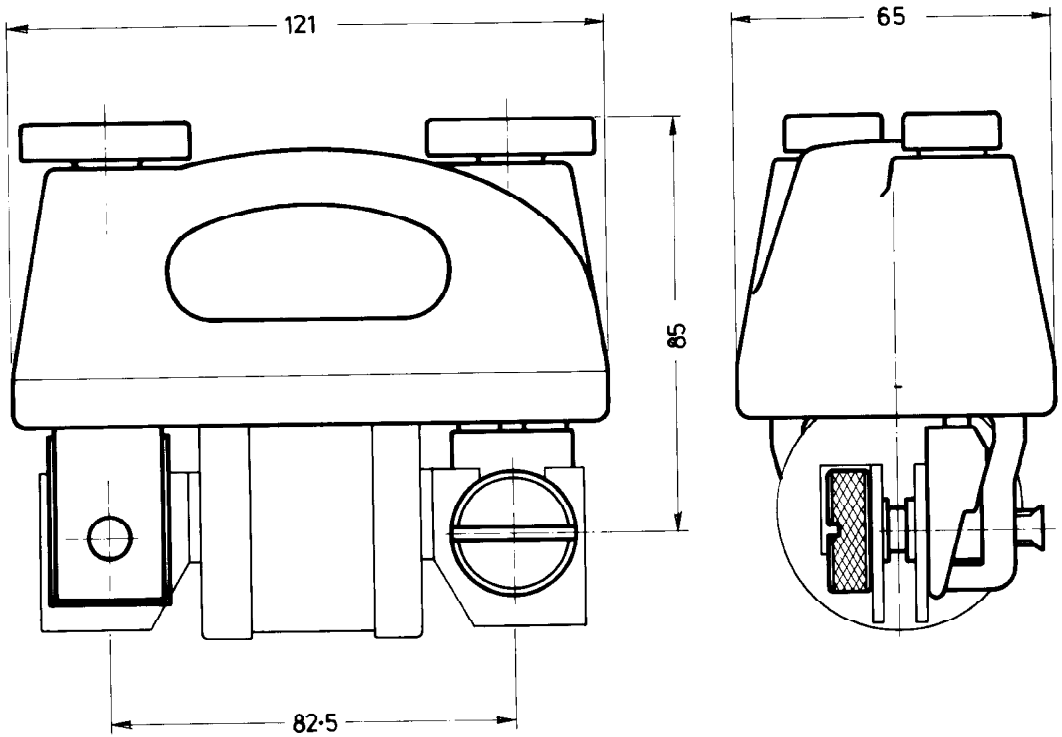

Technical Notes

ISSUE	MOD No.	MOD.	DRN	DATE

DRAWN
CKD.
DATE 10-9-1981
SCALE 1:1
TOL

NEW ZEALAND INSULATORS LIMITED
TEMUKA NEW ZEALAND

Cat Nº 325-5
3 1/4" Thru grip unshrouded carrier

MATL.
FINISH

No. REQD.
PART No. 17-468582

D520-0505/A