ALL DIMENSIONS IN M.M. DO NOT SCALE – IF IN DOUBT ASK FIRST ANGLE PROJECTION

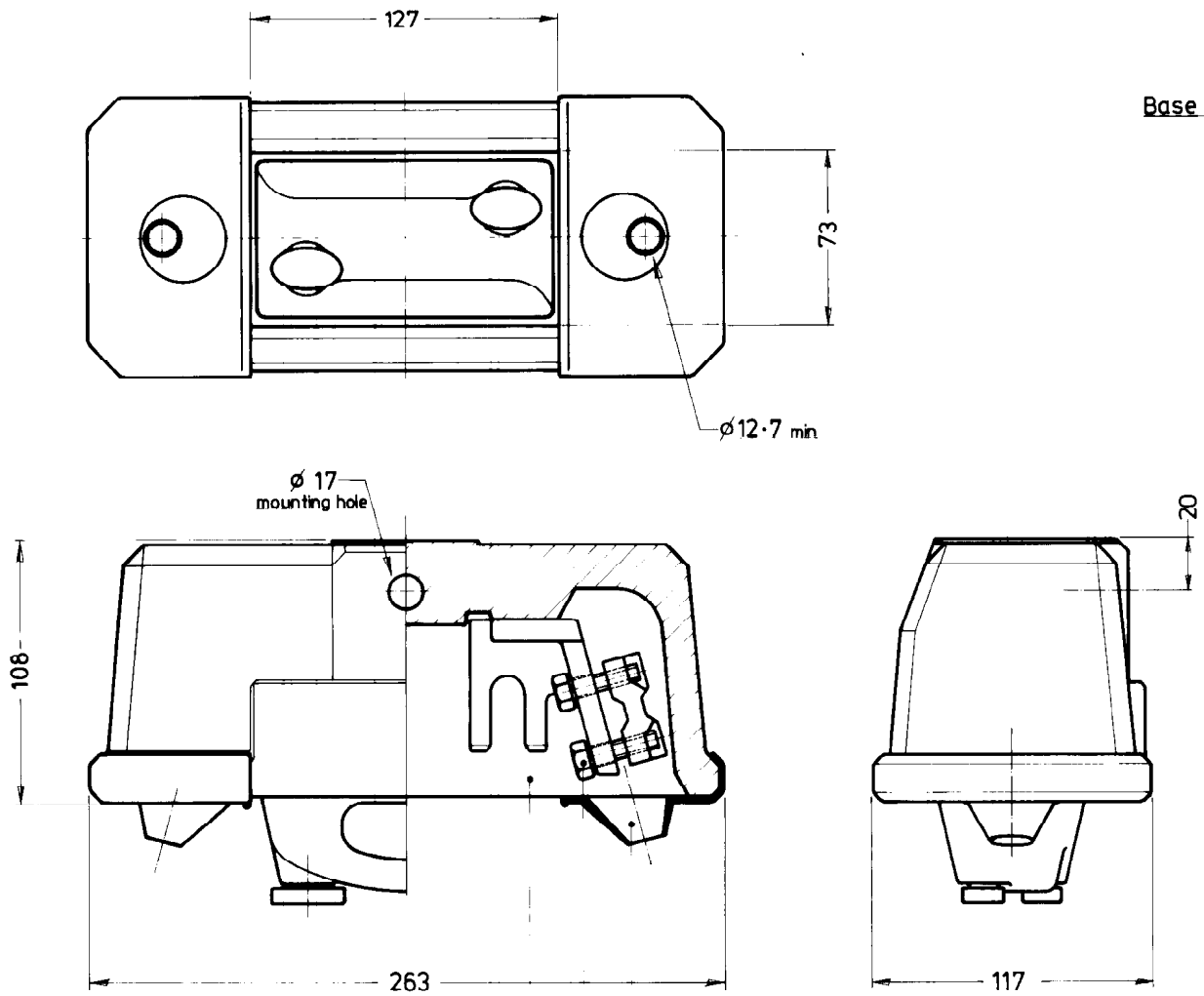

Base shown with Cat Nº 325-5 carrier fitted

Technical Notes

325-10 Group 17 EDP 468657
325-5 Group 17 EDP 468592
Group 17 EDP 468681

BASE
brown glazed porcelain

CONTACTS
brass electro tin plated

SHROUD
PVC

ISSUE	MOD No.	MOD.	DRN	DATE

DRAWN
CKD.
DATE 10-9-1981
SCALE 1:2
TOL —

NEW ZEALAND INSULATORS LIMITED
TEMUKA NEW ZEALAND

Cat Nº 325-10
3¼ Porcelain Wedge fuse base

No. REQD.
PART No.
MATL. —
FINISH —

D.377-0510/A