ALL DIMENSIONS IN MILLIMETRES - DO NOT SCALE - IF IN DOUBT PLEASE ASK

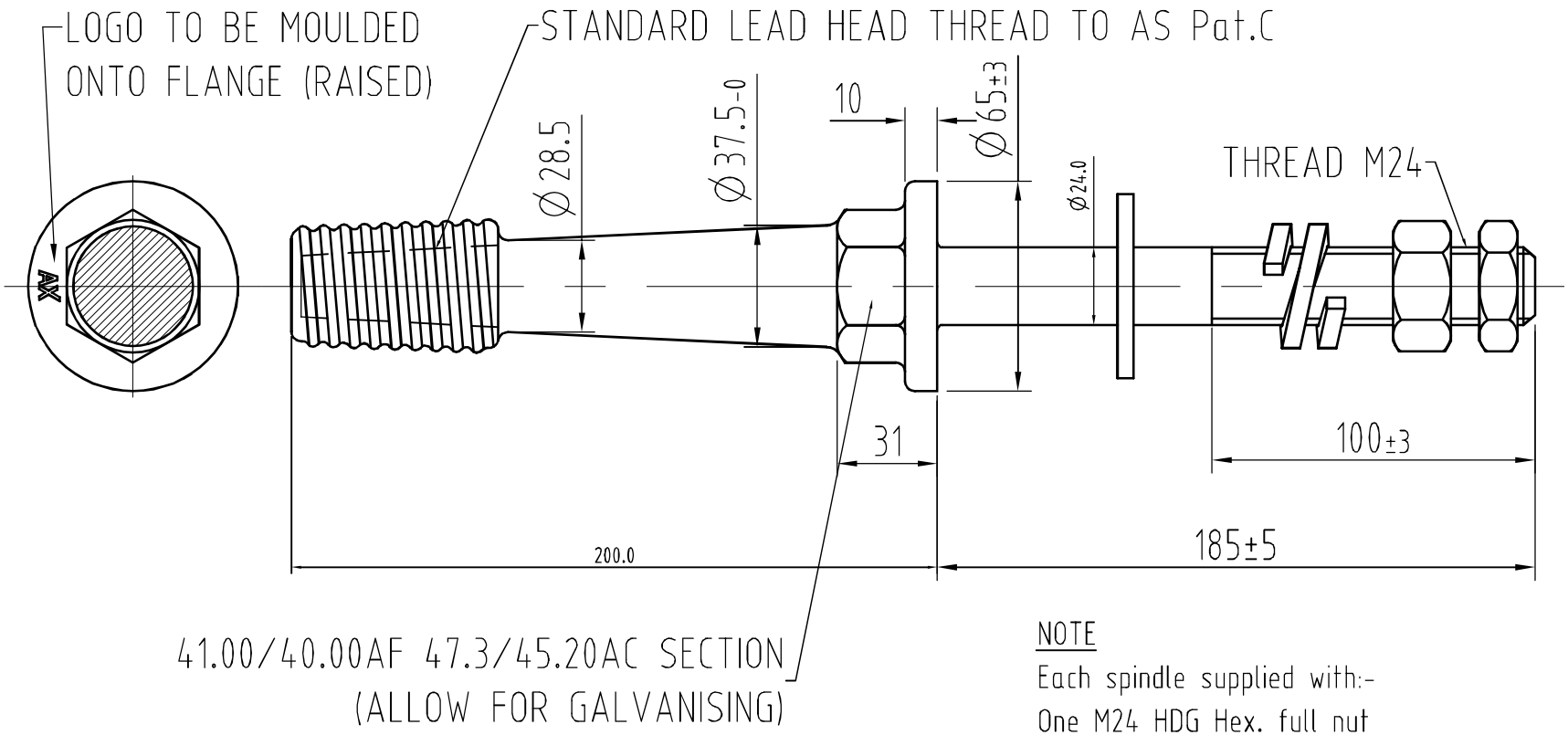

NOTE

Each spindle supplied with:-

One M24 HDG Hex. full nut

One M24 HDG Hex. thin nut

One 57x57x5 HDG square flat washer

One M24 HDG double coil spring washer

			Material AISI 1025 STEEL	Drawn J.Bain	NEW ZEALAND INSULATORS nzi TEMUKA
			Finish HOT DIP GALVANISE TO BS.729	Date 18.5.2011	
			Tolerance - unless otherwise noted ± 1.0	FIRST ANGLE PROJECTION	
B	3395	19.1.12	EDP N°538205		AUSTRALIAN Pat. C INSULATOR SPINDLE 200/185 - TYPE C/200/11 - M24
Issue	Mod. No.	Date	Casting Drg.N°		

NEW ZEALAND INSULATORS LTD
Tel: +64-3-687 8100
Fax: +64-3-615 8125
e-mail: sales@nzinsulators.co.nz

D374-2085/B

COPYRIGHT RESERVED © No part of this drawing may be copied or reproduced by any means or transmitted in any form without the written permission of NEW ZEALAND INSULATORS LTD